Azimuthal asymmetries at the probe of nuclear matter at EIC

Yu-kun Song

University of Jinan, Shandong

In collaboration with Jian-hua Gao, Zuo-tang Liang and Xin-Nian Wang

Contents

QCD matter

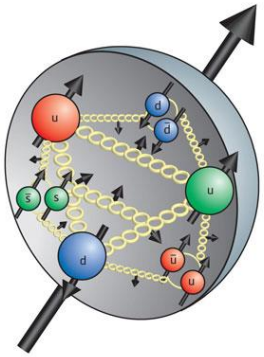

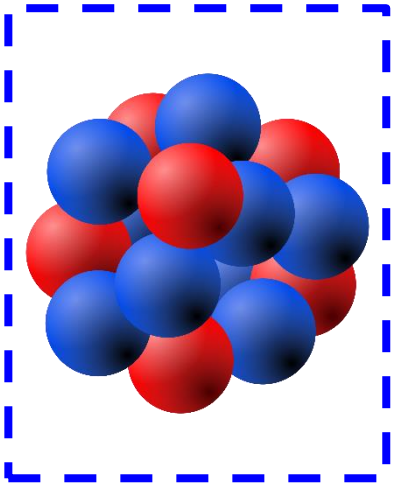

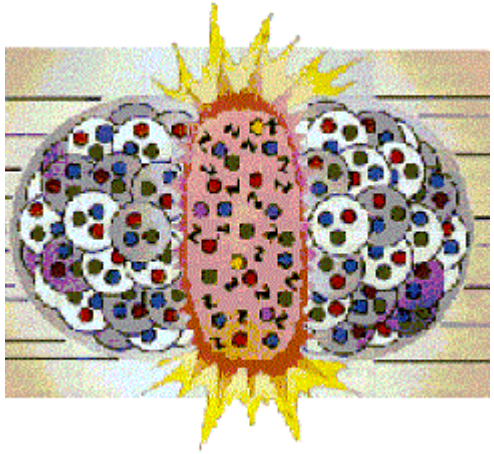

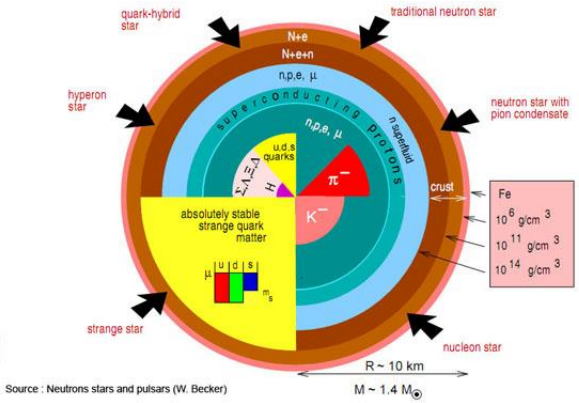

- Strongly interacting multi-particle system
- Internal dynamics
  - Lattice QCD, AdS/QCD, Effective model
- Internal structure
  - Use hard probe for tomography → hard process

DIS, Drell-Yan, EIC,…

Factorization for non-gauge theory at leading twist

- Sterman-Libby power-counting *(Sterman&Libby, 1978)*
- DIS as an example

$$e + N \to e + X$$

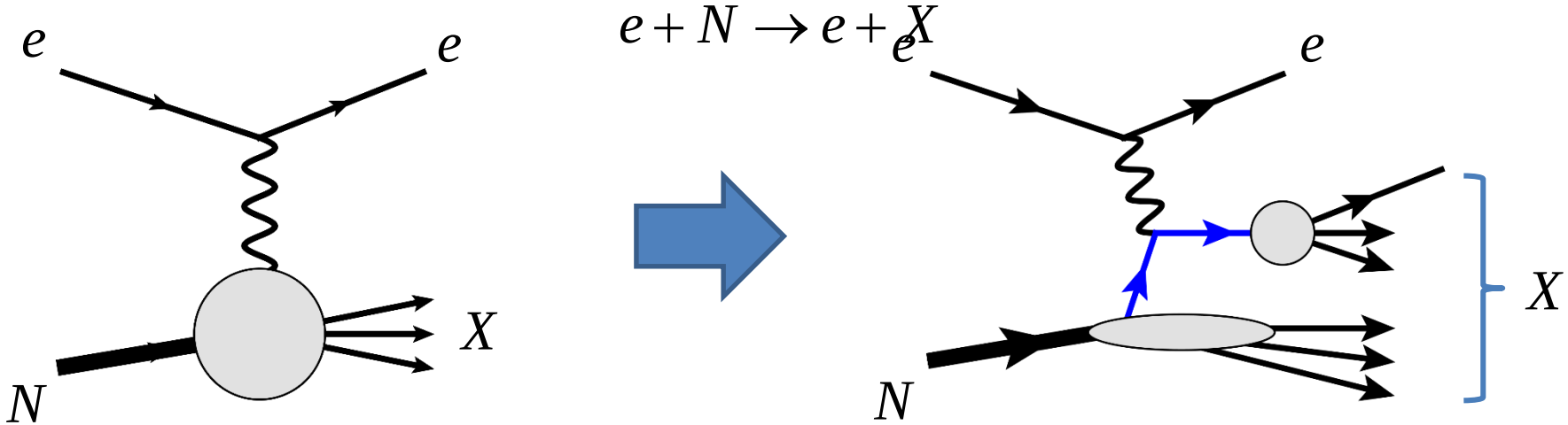

- In non-gauge theory, at leading twist level, Feynman diagrams has the factorized form

$$\mathrm{d}\sigma_{eN\to eX} = \sum_q \int \mathrm{d}x\ f_q^N(x)\,\mathrm{d}\hat{\sigma}_{eq\to eq} + \mathcal{O}\left(\frac{\Lambda}{Q}\right)$$

$$f_q^N(x) = \int \frac{\mathrm{d}\xi^-}{4\pi} e^{ixp^+\xi^-} \langle p | \bar{\psi}(0)\gamma^+\psi(\xi^-) | p \rangle$$

Factorization for gauge theory at leading twist

- Leading Feynman diagrams

$$\mathrm{d}\sigma = \int \frac{\mathrm{d}^4 k_i}{(2\pi)^4} \mathrm{Tr}[\hat{\Phi}(k)\hat{H}(k)]$$

$$p^\rho \simeq p^+ \bar{n}^\mu$$

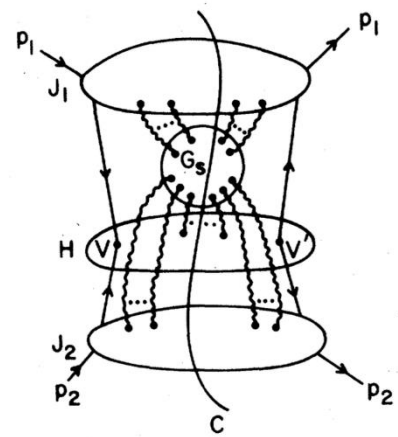

- For leading twist, perform Collinear Approximation
  - Collinear approximation for hard parts

$$\hat{H}(k) \simeq \hat{H}(xp)$$

  - Collinear approximation for gluon polarization

$$A^\rho \simeq A^+ \bar{n}^\mu$$

  - Use of Ward identity to reorganize the cross section

DIS at leading twist, tree level H

- Leading Feynman diagrams + collinear approximation

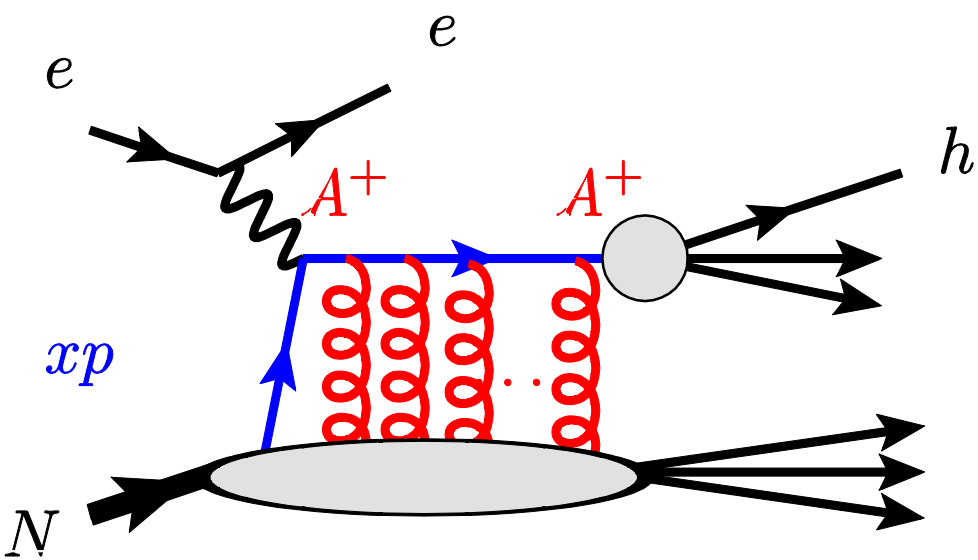

$$\mathrm{d}\sigma_{eN\to eX} = \sum_q \int \mathrm{d}x\; f_q^N(x)\,\mathrm{d}\hat{\sigma}_{eq\to eq} + \mathcal{O}\left(\frac{\Lambda}{Q}\right)$$

$$f_q^N(x) = \int \frac{\mathrm{d}\xi^-}{4\pi} e^{ixp^+\xi^-} \langle p\,|\,\bar{\psi}(0)\gamma^+\mathcal{L}_{\parallel}(0;\xi^-)\psi(\xi^-)\,|\,p\rangle$$

Why we need higher twists

- Some azimuthal asymmetries absent at leading twist

Unpolarized jet production in SIDIS

$$\langle \cos\phi \rangle = -\frac{2(2-y)\sqrt{1-y}}{2-2y+y^2}\frac{|\vec{k}_\perp|}{Q} \qquad \tau=3$$

$$\langle \cos 2\phi \rangle = \frac{2-2y}{2-2y+y^2}\frac{\vec{k}_\perp^2}{Q^2} \qquad \tau=4$$

Cahn, 1978

- Sometimes more sensitive to nuclear effects

$$\langle A|\psi F F \psi|A\rangle \quad \propto \quad A^{1/3}$$

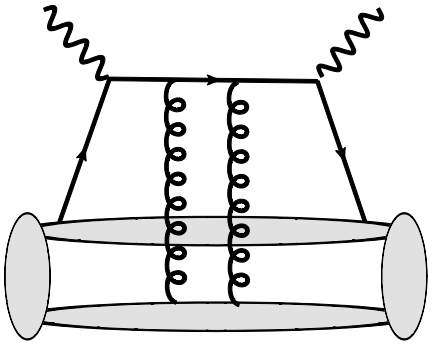

- For Jlab et al., high precision medium energy exps., higher twist not negligible

DIS at higher twist

- Source of higher twist
  - Leading Feynman diagram with non-collinear momentum / non-collinear gluon field
  - Non-leading Feynman diagrams

Leading twist $\rightarrow$ higher twist

Collinear approximation $\rightarrow$ collinear expansion

Ellis, Furmanski, Petronzio, 1981

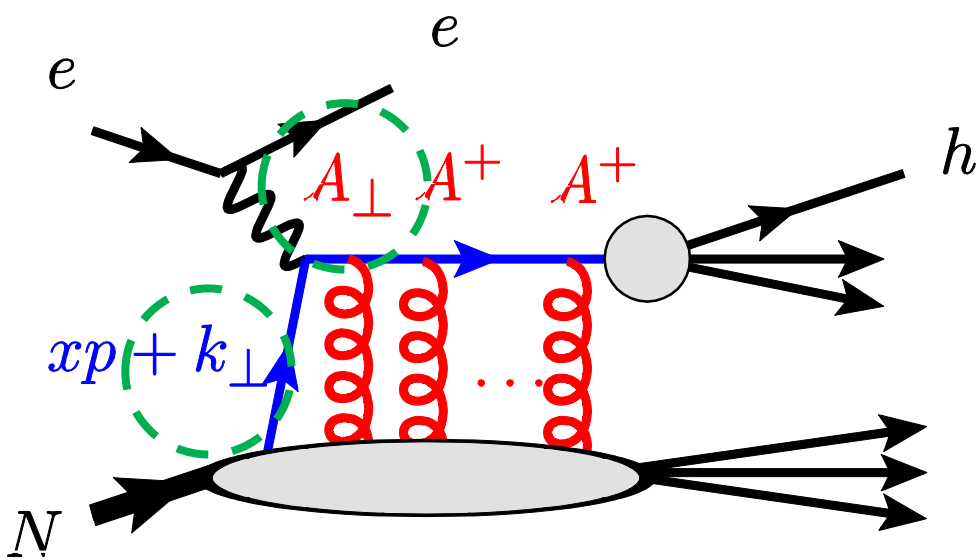

Collinear expansion in DIS

$e + N \to e + X$ *[Ellis, Furmanski, Petronzio, 1982,1983 ;Qiu,1990]*

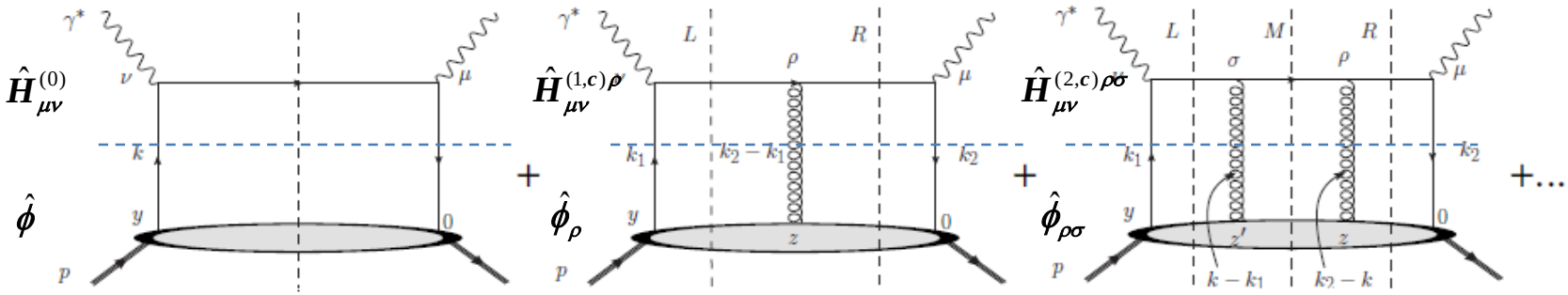

$$W^{(0)}_{\mu\nu} = \hat{H}^{(0)}_{\mu\nu} \otimes \hat{\phi} \qquad W^{(1)}_{\mu\nu} = \sum_{c=L,R} \hat{H}^{(1,c)\rho}_{\mu\nu} \otimes \hat{\phi}_\rho \qquad W^{(2)}_{\mu\nu} = \sum_{c=L,R,M} \hat{H}^{(2,c)\rho\sigma}_{\mu\nu} \otimes \hat{\phi}_{\rho\sigma}$$

Collinear Expansion:

1. Taylor expand $\hat{H}^{(n,c)}_{\mu\nu}(k_i)$ at $k_i = x_i p$, and decompose A^ρ

$$\hat{H}^{(0)}(k) = \hat{H}^{(0)}(x) + \frac{\partial \hat{H}^{(0)}(x)}{\partial k^\rho} \omega^\rho{}_{\rho'} k^{\rho'} + \frac{1}{2} \frac{\partial^2 \hat{H}^{(0)}(x)}{\partial k^\rho \partial k^\sigma} \omega^\rho{}_{\rho'} k^{\rho'} \omega^\sigma{}_{\sigma'} k^{\sigma'} + \ldots \qquad A^\rho = \frac{A^+}{p^+} p^\rho + \omega^\rho{}_{\rho'} A^{\rho'}$$

2. Apply Ward Identities

$$\frac{\partial \hat{H}^{(0)}_{\mu\nu}(x)}{\partial k^\rho} = -\sum_{c=L,R} \hat{H}^{(1,c)\rho}_{\mu\nu}(x,x), \quad p_\rho \hat{H}^{(1,L)\rho}_{\mu\nu}(x_1,x_2) = \frac{\hat{H}^{(0)}_{\mu\nu}(x_1)}{x_2 - x_1 - i\varepsilon}$$

3. Sum up and rearrange all terms,

$$W_{\mu\nu} = \frac{1}{2\pi} \left\{ \hat{H}^{(0)}_{\mu\nu}(x) \otimes \hat{\Phi}^{(0)}(x) + \sum_{c=L,R} \hat{H}^{(1,c)\rho}_{\mu\nu}(x_1,x_2) \omega_\rho{}^{\rho'} \otimes \hat{\Phi}^{(1)}_{\rho'}(x_1,x_2) + \sum_{c=L,M,R} \hat{H}^{(2,c)\rho\sigma}_{\mu\nu}(x_1,x_2,x) \omega_\rho{}^{\rho'} \omega_\sigma{}^{\sigma'} \otimes \hat{\Phi}^{(2)}_{\rho'\sigma'}(x_1,x_2,x) \right\}$$

DIS structure functions at twist-4

[Ellis, Furmanski, Petronzio, 1982,1983 ;Qiu,1990]

$$F_L(x_B,Q^2) = \frac{4\Lambda^2}{Q^2} T_1(x_B) + O\left(\frac{1}{Q^4}\right)$$

$$F_L(x_B,Q^2) = A_0(x_B) + \frac{\Lambda^2}{Q^2}\left\{4T_1(x_B) - x_B \int dx_1 dx_2 \frac{\delta(x_2 - x_B) - \delta(x_1 - x_B)}{x_2 - x_1} T_2(x_2, x_1)\right\} + O\left(\frac{1}{Q^4}\right)$$

Collinear expansion in SIDIS

- In the low $k_\perp$ region, we consider the case when final state is a quark(jet) $e + N \to e + q(\text{jet}) + X$

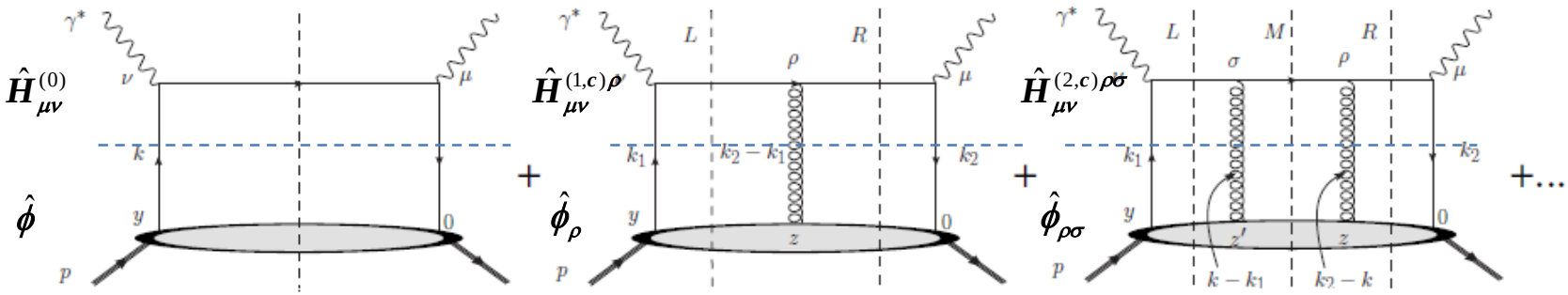

$$W^{(0)}_{\mu\nu} = \hat{H}^{(0)}_{\mu\nu} \otimes \hat{\phi} \otimes K \qquad W^{(1)}_{\mu\nu} = \sum_{c=L,R} \hat{H}^{(1,c)\rho}_{\mu\nu} \otimes \hat{\phi}_\rho \otimes K \qquad W^{(2)}_{\mu\nu} = \sum_{c=L,R,M} \hat{H}^{(2,c)\rho\sigma}_{\mu\nu} \otimes \hat{\phi}_{\rho\sigma} \otimes K$$

Compared to DIS, the only difference is the kinematical factor

$$K = 2E_{k'}(2\pi)^3 \delta^3(\vec{k}' - \vec{k}_c - \vec{q})$$

Leave this factor alone, and make collinear expansion over the hard part H, one will get higher twists for SIDIS

[Liang, Wang, 2006]

Hadronic tensor for SIDIS

$$\frac{dW_{\mu\nu}}{d^2k_\perp} = \frac{d\tilde{W}^{(0)}_{\mu\nu}}{d^2k_\perp} + \sum_{c=L,R} \frac{dW^{(1,c)}_{\mu\nu}}{d^2k_\perp} + \sum_{c=L,R,M} \frac{dW^{(2,c)}_{\mu\nu}}{d^2k_\perp} + \ldots$$

ω : Projection operator

$\omega \cdot k = k - xp$

$$\frac{d^2\tilde{W}^{(0)}_{\mu\nu}}{d^2k_\perp} = \frac{1}{2}\mathrm{Tr}\left[\hat{h}^{(0)}_{\mu\nu}\hat{\Phi}^{(0)N}(x_B, k_\perp)\right], \qquad \tau = 2,3,4$$

$$\frac{d^2\tilde{W}^{(1,L)}_{\mu\nu}}{d^2k_\perp} = \frac{1}{4q\cdot p}\mathrm{Tr}\left[\hat{h}^{(1)\rho}_{\mu\nu}\omega_\rho^{\ \rho'}\hat{\varphi}^{(1,L)N}_{\rho'}(x_B, k_\perp)\right], \qquad \tau = 3,4,\ldots$$

$$\frac{d^2\tilde{W}^{(2,L)}_{\mu\nu}}{d^2k_\perp} = \frac{1}{(2q\cdot p)^2}\{\mathrm{Tr}\left[\hat{h}^{(1)\rho}_{\mu\nu}\omega_\rho^{\ \rho'}\hat{\varphi}^{(2,L)N}_{\rho'}(x_B, k_\perp)\right] + \mathrm{Tr}\left[\hat{N}^{(2)\rho\sigma}_{\mu\nu}\omega_\rho^{\ \rho'}\omega_\sigma^{\ \sigma'}\hat{\varphi}^{(2,L)N}_{\rho'\sigma'}(x_B, k_\perp)\right]\},$$

$$\frac{d^2\tilde{W}^{(2,M)}_{\mu\nu}}{d^2k_\perp} = \frac{1}{(2q\cdot p)^2}\mathrm{Tr}\left[\hat{h}^{(2)\rho\sigma}_{\mu\nu}\omega_\rho^{\ \rho'}\omega_\sigma^{\ \sigma'}\hat{\varphi}^{(2,M)N}_{\rho'\sigma'}(x_B, k_\perp)\right].$$

$\tau = 4,\ldots$

- $\hat{\Phi}^{(0)}, \varphi^{(1,L)}, \varphi^{(2,L)}, \varphi^{(2,M)}$: color gauge invariant

$$\langle\bar{\psi}(0)\mathcal{L}(0;y)\psi(y)\rangle, \quad \langle\bar{\psi}(0)\mathcal{L}(0;y)D_\perp(y)\psi(y)\rangle,$$
$$\langle\bar{\psi}(0)D_\perp(0)D_\perp(0)\mathcal{L}(0;y)\psi(y)\rangle,$$

Tensor decomposition and QCD EOM

- Lorentz invariance + Parity invariance

$$\Phi_\alpha^{(0)} = \left(f_1 - \varepsilon_\perp^{ks} f_{1T}^\perp \right) p_\alpha + \left(f^\perp - \varepsilon_\perp^{ks} f_T^\perp \right) k_{\perp\alpha} + f_T M \varepsilon_{\perp\alpha i} s_\perp^i + \lambda f_L^\perp \varepsilon_{\perp\alpha i} k_\perp^i + \ldots$$

$$\tilde{\Phi}_\alpha^{(0)} = -\left(\lambda g_{1L} - \frac{k_\perp \cdot s_\perp}{M} g_{1T}^\perp \right) p_\alpha - \left(g^\perp + \varepsilon_\perp^{ks} g_T^\perp \right) \varepsilon_{\perp\alpha i} k_\perp^i - g_T M s_{\perp\alpha} - \lambda g_L^\perp k_{\perp\alpha} + \ldots$$

$$\hat{\varphi}^{(1,L)} = \gamma^\alpha \varphi_{\rho\alpha}^{(1,L)} - \gamma_5 \gamma^\alpha \tilde{\varphi}_{\rho\alpha}^{(1,L)} + \ldots$$

$$\varphi_{\rho\alpha}^{(1,L)} = p_\alpha \left[\left(\varphi^\perp - \varepsilon_\perp^{ks} \varphi_T^\perp \right) k_{\perp\rho} + \varphi_T M \varepsilon_{\perp\rho i} s_\perp^i + \lambda \varphi_L^\perp \varepsilon_{\perp\rho i} k_\perp^i \right] + \ldots$$

$$\tilde{\varphi}_{\rho\alpha}^{(1,L)} = i p_\alpha \left[\left(\tilde{\varphi}^\perp + \varepsilon_\perp^{ks} \tilde{\varphi}_T^\perp \right) \varepsilon_{\perp\rho i} k_\perp^i + \tilde{\varphi}_T M s_{\perp\rho} + \lambda \tilde{\varphi}_L^\perp k_{\perp\rho} \right] + \ldots$$

- QCD equation of motion to simplify results

Unpolarized SIDIS at twist-4 level

- Cross section for $e+N\to e+q+X$ *[**YKS**, Gao, Liang, Wang,2011]*

$$\frac{d\sigma}{dxdyd^2k_\perp}=\frac{2\pi\alpha_{\rm em}^2e_q^2}{Q^2y}\times\Big\{[1+(1-y)^2]f(x_B,k_\perp)-4(2-y)\sqrt{1-y}\,\frac{|\vec{k}_\perp|}{Q}x_Bf_\perp(x_B,k_\perp)\cos\phi$$
$$-4(1-y)\frac{|\vec{k}_\perp^2|}{Q^2}x_B[\varphi_{\perp2}^{(1)}(x_B,k_\perp)-\tilde{\varphi}_{\perp2}^{(1)}(x_B,k_\perp)]\cos2\phi$$
$$+8(1-y)\left(\frac{|\vec{k}_\perp^2|}{Q^2}x_B[\varphi_{\perp2}^{(1)}(x_B,k_\perp)-\tilde{\varphi}_{\perp2}^{(1)}(x_B,k_\perp)]+\frac{2x_B^2M^2}{Q^2}f_{(-)}(x_B,k_\perp)\right)$$
$$-2[1+(1-y)^2]\frac{|\vec{k}_\perp^2|}{Q^2}x_B(\varphi_{\perp2}^{(2,L)}(x_B,k_\perp)-\tilde{\varphi}_{\perp2}^{(2,L)}(x_B,k_\perp)\Big\}$$

$$\langle\cos2\phi\rangle=-\frac{2(1-y)}{1+(1-y)^2}\frac{|\vec{k}_\perp^2|}{Q^2}\frac{x_B[\varphi_{\perp2}^{(1)}(x_B,k_\perp)-\tilde{\varphi}_{\perp2}^{(1)}(x_B,k_\perp)]}{f(x_B,k_\perp)}$$

- Twist-4 parton correlation functions

$$\varphi_{\perp2}^{(1)}(x_B,k_\perp)=\frac{2k_{\perp\rho}k_{\perp\alpha}-k_\perp^2g_{\perp\rho\alpha}}{k_\perp^4}\int\frac{dy^-d^2y_\perp}{(2\pi)^3}e^{ixp^+y^--i\vec{k}_\perp\cdot\vec{y}_\perp}\langle p,s|\bar{\psi}(0)\frac{\gamma_{\perp\alpha}}{2}D_{\perp\rho}(0)L(0;y)\psi(y)|p,s\rangle$$

$$\tilde{\varphi}_{\perp2}^{(1)}(x_B,k_\perp)=\frac{-ik_{\perp\{\alpha}\varepsilon_{\perp\rho\}\gamma}k_\perp^\gamma}{k_\perp^4}\int\frac{dy^-d^2y_\perp}{(2\pi)^3}e^{ixp^+y^--i\vec{k}_\perp\cdot\vec{y}_\perp}\langle p,s|\bar{\psi}(0)\frac{\gamma_5\gamma_{\perp\alpha}}{2}D_{\perp\rho}(0)L(0;y)\psi(y)|p,s\rangle$$

Doubly polarized $e+N \to e+q+X$ at twist-3

$$\vec{e}(\lambda_l)+\vec{N}(\lambda,s_\perp)\to e+q+X$$ [**YKS**, Gao, Liang, Wang, 2013]

$$\frac{d\sigma}{dx_B dy d^2k_\perp}=\frac{2\pi\alpha_{\rm em}^2 e_q^2}{Q^2 y}\left(F_{UU}+\lambda_l F_{LU}+s_\perp F_{UT}+\lambda F_{UL}+\lambda_l\lambda F_{LL}+\lambda_l s_\perp F_{LT}\right),$$

$$F_{UU}=A(y)\,f_1-\frac{2x_B|\vec{k}_\perp|}{Q}B(y)\,f^\perp\cos\phi,$$

$$F_{UT}=\frac{|\vec{k}_\perp|}{M}A(y)\,f_{1T}^\perp\sin(\phi-\phi_s)+\frac{2x_B M}{Q}B(y)\left[\left(f_T-\frac{k_\perp^2}{2M^2}f_T^\perp\right)\sin\phi_s+\frac{k_\perp^2}{2M^2}f_T^\perp\sin(2\phi-\phi_s)\right],$$

$$F_{UL}=\frac{2x_B|\vec{k}_\perp|}{Q}B(y)\,f_L^\perp\sin\phi,$$

$$F_{LU}=\frac{2x_B|\vec{k}_\perp|}{Q}D(y)g^\perp\sin\phi,$$

$$F_{LL}=C(y)g_{1L}-\frac{2x_B|\vec{k}_\perp|}{Q}D(y)g_L^\perp\cos\phi,$$

$$F_{LT}=\frac{|\vec{k}_\perp|}{M}C(y)g_{1T}^\perp\cos(\phi-\phi_s)-\frac{2x_B M}{Q}D(y)\left[\left(g_T-\frac{k_\perp^2}{2M^2}g_T^\perp\right)\cos\phi_s+\frac{k_\perp^2}{2M^2}g_T^\perp\cos(2\phi-\phi_s)\right]$$

PDF modified by the nuclei

- For nuclei involved hard process, factorization theorem should give identical cross section, with f^N replaced by f^A

$$\mathrm{d}\sigma_{eN\to eqX} = \sum_q \int \mathrm{d}x\mathrm{d}^2k_\perp \; f_q^N(x,k_\perp)\,\mathrm{d}\hat{\sigma}_{eq\to eq}$$

$$\mathrm{d}\sigma_{eA\to eqX} = \sum_q \int \mathrm{d}x\mathrm{d}^2k_\perp \; f_q^A(x,k_\perp)\,\mathrm{d}\hat{\sigma}_{eq\to eq}$$

- Nucleon PDF and nuclear PDF should have similar form

$$f_q^N(x,k_\perp) = \int \frac{\mathrm{d}\xi^-\mathrm{d}^2\boldsymbol{\xi}_\perp}{2(2\pi)^3} e^{ixp^+\xi^- - i\vec{k}_\perp\cdot\vec{\xi}_\perp} \langle N,s|\bar{\psi}(0)\mathcal{L}_\parallel(0^-,\vec{0}_\perp;\infty,\vec{0}_\perp)\mathcal{L}_\parallel(0,\vec{\xi}_\perp;\infty,\vec{\xi}_\perp)\psi(\xi)|N,s\rangle$$

$$f_q^A(x,k_\perp) = \int \frac{\mathrm{d}\xi^-\mathrm{d}^2\boldsymbol{\xi}_\perp}{2(2\pi)^3} e^{ixp^+\xi^- - i\vec{k}_\perp\cdot\vec{\xi}_\perp} \langle A,s|\bar{\psi}(0)\mathcal{L}_\parallel(0^-,\vec{0}_\perp;\infty,\vec{0}_\perp)\mathcal{L}_\parallel(0,\vec{\xi}_\perp;\infty,\vec{\xi}_\perp)\psi(\xi)|A,s\rangle$$

Nucleon PDF .vs. nuclear PDF

$f_q^N(x, k_\perp)$

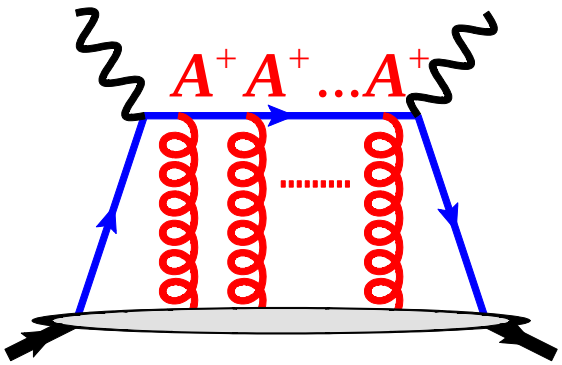

$\langle N | \bar{\psi}(0) \mathcal{L}(0; y) \psi(y) | N \rangle$

$f_q^A(x, k_\perp)$

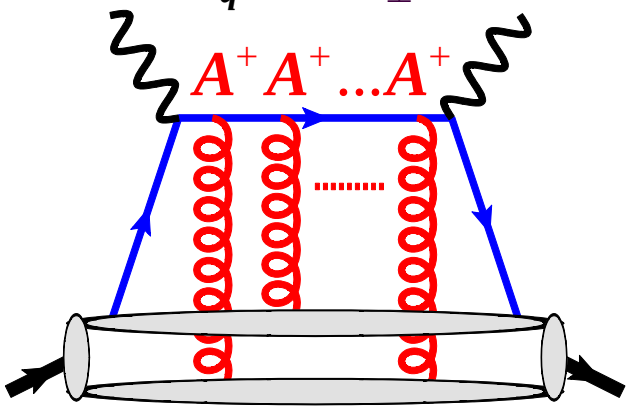

$\langle A | \bar{\psi}(0) \mathcal{L}(0; y) \psi(y) | A \rangle$

More FSI !

- The leading term of the difference lie in the gauge link, which is generated by multiple gluon scattering.
- A^+ gluons can be connected to other spectator nucleons. This will cause a physical effect.

Modeling nuclear effects

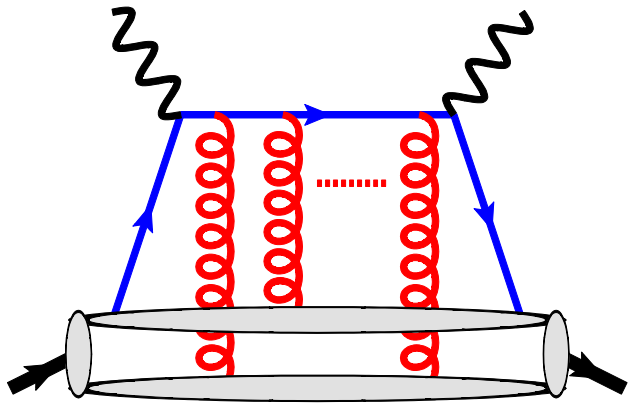

- To extract explicit relation between f^N and f^A one must have a model of nuclei (Liang, Wang, Zhou, 2008)

Loosely bouned nucleus
Very large A
Maximize the nuclear effects

$$\Phi_\alpha^A(x,k_\perp) = \frac{A}{\pi\Delta_{2F}} \int d^2\ell_\perp e^{-(\vec{k}_\perp-\vec{\ell}_\perp)^2/\Delta_{2F}} \Phi_\alpha^N(x,\ell_\perp)$$

Quark transport parameter

$$\Phi_\alpha^A(x,k_\perp) = \frac{A}{\pi\Delta_{2F}} \int \mathrm{d}^2\ell_\perp e^{-(\vec{k}_\perp - \vec{\ell}_\perp)^2/\Delta_{2F}} \Phi_\alpha^N(x,\ell_\perp)$$

$$\Delta_{2F} = \int \mathrm{d}\xi^- \hat{q}_F(\xi_N^-)$$

$$\hat{q}_F(\xi_N^-) = \frac{2\pi^2\alpha_s}{N_c} \rho_N^A(\xi_N)\left[xf_g^N(x)\right]_{x=0}$$

- $\hat{q}_F$: effective transverse momentum broadening squared per unit distance for a fundamental quark

Nuclear modification of PDFs

YKS, Liang, Wang, 2014

$$\Phi_\alpha^A(x,\vec{k}_\perp) = \frac{A}{\pi\Delta_{2F}}\int \mathrm{d}^2\ell_\perp e^{-(\vec{k}_\perp-\vec{\ell}_\perp)^2/\Delta_{2F}}\Phi_\alpha^N(x,\ell_\perp)$$

$$\Phi_\alpha^{(0)} = \left(f_1 - \varepsilon_\perp^{ks} f_{1T}^\perp\right)p_\alpha + \left(f^\perp - \varepsilon_\perp^{ks} f_T^\perp\right)k_{\perp\alpha} + f_T M \varepsilon_{\perp\alpha i} s_\perp^i + \lambda f_L^\perp \varepsilon_{\perp\alpha i} k_\perp^i + \ldots$$

- Projection both sides to get PDF relations

$$f_q^A(x,k_\perp) = \frac{A}{\pi\Delta_{2F}}\int \mathrm{d}^2\ell_\perp e^{-i(\vec{k}_\perp-\vec{\ell}_\perp)^2/\Delta_{2F}} f_q^N(x,\ell_\perp)$$

$$\vec{k}_\perp^2 f_q^{\perp A}(x,k_\perp) = \frac{A}{\pi\Delta_{2F}}\int \mathrm{d}^2\ell_\perp e^{-i(\vec{k}_\perp-\vec{\ell}_\perp)^2/\Delta_{2F}} (\vec{k}_\perp\cdot\vec{\ell}_\perp) f_q^N(x,\ell_\perp)$$

$$\varepsilon_\perp^{ks} f_{1T,q}^{\perp A}(x,k_\perp) = \frac{J_A}{\pi\Delta_{2F}}\int \mathrm{d}^2\ell_\perp e^{-i(\vec{k}_\perp-\vec{\ell}_\perp)^2/\Delta_{2F}} \varepsilon_\perp^{\ell s} f_q^N(x,\ell_\perp)$$

……

Nuclear modification of PDFs

- Take Gaussian ansatz for the $k_\perp$ distribution, we obtain approximate form for nuclear PDFs

$$f_q^N(x,\ell_\perp) = \frac{1}{\pi\alpha} f_q^N(x) e^{-\vec{\ell}_\perp^2/\alpha} \Rightarrow f_q^A(x,k_\perp) \approx \frac{A}{\pi\alpha_A} f_q^N(x) e^{-\vec{k}_\perp^2/\alpha_A}$$

$$f_q^{\perp N}(x,\ell_\perp) = \frac{1}{\pi\beta} f_q^{\perp N}(x) e^{-\vec{\ell}_\perp^2/\beta} \Rightarrow f_q^{\perp A}(x,k_\perp) \approx \frac{A}{\pi\beta_A}\frac{\beta}{\beta_A} f_q^{\perp N}(x) e^{-\vec{k}_\perp^2/\beta_A}$$

$$f_{1T,q}^{\perp N}(x,\ell_\perp) = \frac{1}{\pi\gamma} f_{1T,q}^{\perp N}(x) e^{-\vec{\ell}_\perp^2/\gamma} \Rightarrow f_{1T,q}^{\perp A}(x,k_\perp) \approx \frac{J_A}{\pi\gamma_A}\frac{\gamma}{\gamma_A} f_{1T,q}^{\perp N}(x) e^{-\vec{k}_\perp^2/\gamma_A}$$

$$\alpha_A \equiv \alpha + \Delta_{2F},\ \beta_A \equiv \beta + \Delta_{2F},\ \gamma_A \equiv \gamma + \Delta_{2F}$$

- $k_\perp$ Gaussian width broadened $\alpha \to \alpha + \Delta_{2F}, \ldots$
- PDFs with $k_\perp$ factor in decomposition formulae get extra suppression $\beta/(\beta+\Delta_{2F})$
- Spin dependent PDFs get large suppression factor J_A/A

Azimuthal asymmetries at EIC

- Unpolarized eA

$$\frac{\langle \cos\phi \rangle_{UU}^{eA}}{\langle \cos\phi \rangle_{UU}^{eN}} \approx \frac{\alpha_A}{\alpha}\left(\frac{\beta}{\beta_A}\right)^2 e^{\left(\frac{1}{\alpha_A}-\frac{1}{\alpha}-\frac{1}{\beta_A}+\frac{1}{\beta}\right)\vec{k}_\perp^2}$$

- Beam polarized eA

$$\frac{\langle \cos\phi \rangle_{LU}^{eA}}{\langle \cos\phi \rangle_{LU}^{eN}} \approx \frac{\alpha_A}{\alpha}\left(\frac{\gamma}{\gamma_A}\right)^2 e^{\left(\frac{1}{\alpha_A}-\frac{1}{\alpha}-\frac{1}{\gamma_A}+\frac{1}{\gamma}\right)\vec{k}_\perp^2}$$

- Both are sensitive to relative size of Gaussian widths

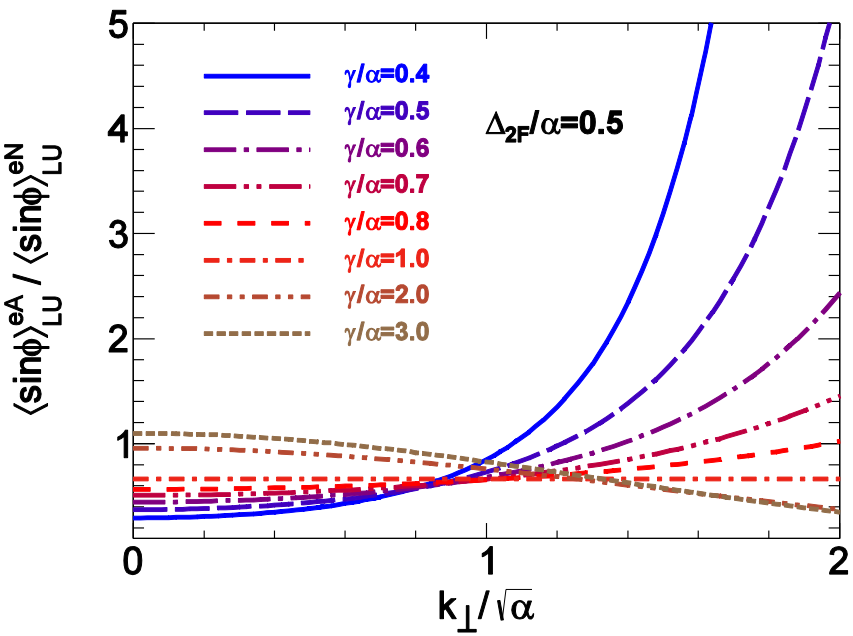

Azimuthal asymmetries at EIC

- If we take all Gaussian width as identical α, then most of the asymmetries are proportional to

$$f_s \equiv \frac{\alpha}{\alpha + \Delta_{2F}}$$

- Numerical estimate

$$\Delta_{2F} = \int \mathrm{d}\xi \hat{q}_F(\xi_N^-) \approx 3\sqrt{2}\hat{q}_0 r_0 A^{1/3}/4 \quad \propto \quad A^{1/3}$$

Proportional to the size of the nuclei

$$f \approx \left(1 + 3\sqrt{2}\hat{q}_0 r_0 A^{1/3}/4\alpha\right)^{-1}$$

$$\hat{q}_0 \approx 0.024 \pm 0.008\,\mathrm{GeV}^2/\mathrm{fm}, \qquad \text{(Deng, Wang, 2010)}$$

$$\alpha \approx 0.25\,\mathrm{GeV}^2$$

kt broadening and azimuthal asymmetries suppression

Song, Liang, Wang, 2014

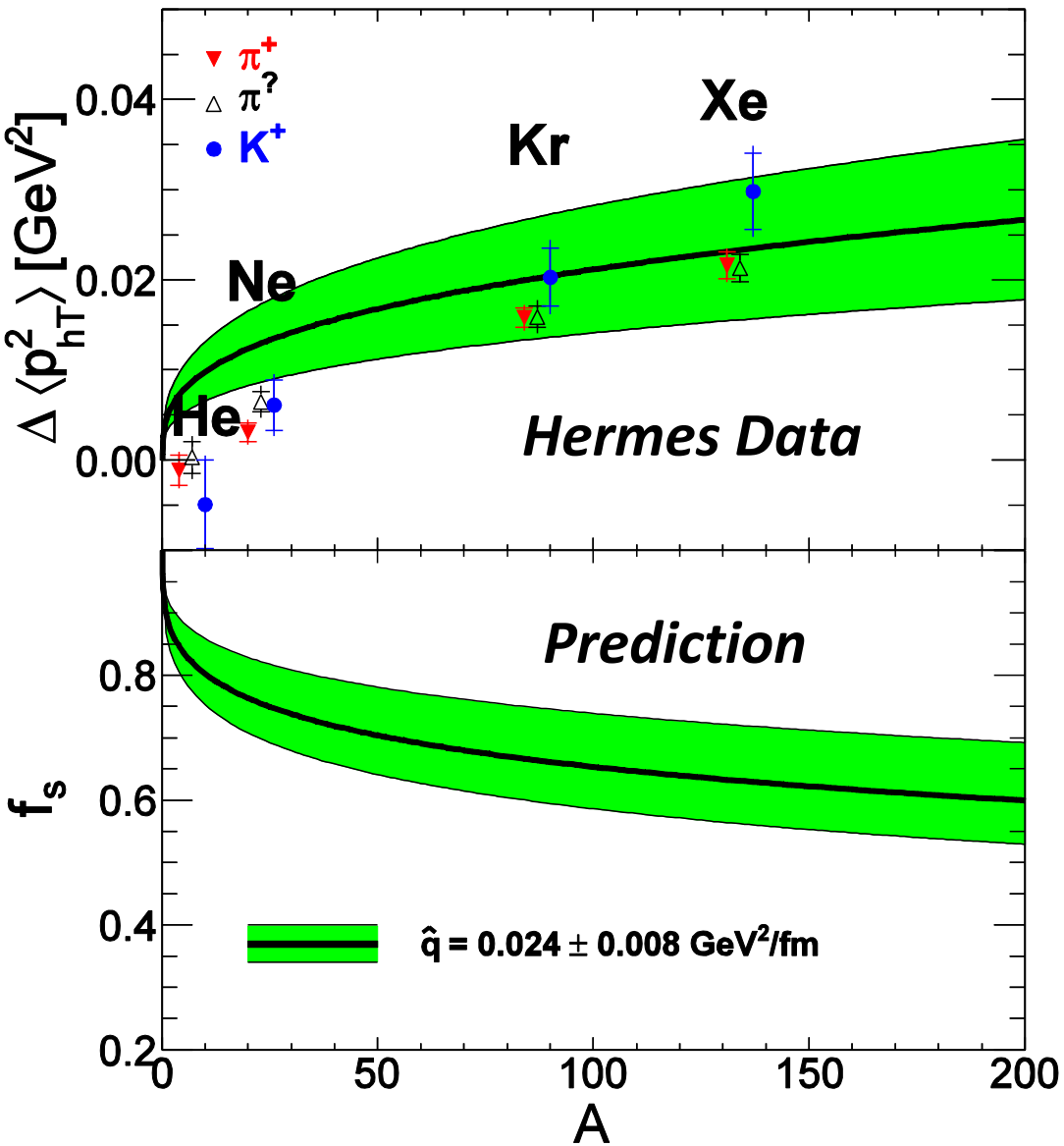

Conclusion and outlook

- Collinear expansion is employed to study higher twist effects
- Cross sections and azimuthal asymmetries up to twist-4 are obtained for eN/eA→eqX
- Nuclear matter change the PDFs through gauge link
- Azimuthal asymmetries modification factor is sensitive to relative size of Gaussian width
- Predictions to the suppression factor $f_s(A)$ of azimuthal asymmetries at EIC

Thanks for your attention!