Cos(2ϕ) azimuthal asymmetry in γ^*-jet production in pA collisions

Yajin Zhou

collaborate with Daniel Boer, Piet Mulders and Jian Zhou

2 June, 2016, QCD Evolution 2016

Outline

Gluon TMDs

TMDs: Transverse momentum dependent functions

$$\Gamma^{[U,U']\mu\nu;\rho\sigma}(x,\boldsymbol{k}_T;P,n) \equiv \int \frac{d\xi\cdot P\, d^2\xi_T}{(2\pi)^3}\, e^{ik\cdot\xi}\, \langle P|\, F^{\mu\nu}(0)U_{[0,\xi]}F^{\rho\sigma}(\xi)U'_{[\xi,0]}\,|P\rangle\Big|_{\xi\cdot n=0}.$$

Gluons	$-g_T^{ij}$	$i\epsilon_T^{ij}$	k_T^i, k_T^{ij}, etc.
U	$\boldsymbol{f_1^g}$		$h_1^{\perp,g}$
L		$\boldsymbol{g_1^g}$	$h_{1L}^{\perp,g}$
T	$f_{1T}^{\perp,g}$	g_{1T}^g	h_1^g, $h_{1T}^{\perp,g}$

Mulders, Rodrigues, PRD63(01),

Meissner, Metz, Goeke, PRD76(07), renaming

Gluon TMDs

TMDs: Transverse momentum dependent functions

$$\Gamma^{[U,U']\mu\nu;\rho\sigma}(x,\boldsymbol{k}_T;P,n) \equiv \int \frac{d\xi\cdot P\, d^2\xi_T}{(2\pi)^3}\, e^{ik\cdot\xi}\, \langle P|\, F^{\mu\nu}(0)U_{[0,\xi]}F^{\rho\sigma}(\xi)U'_{[\xi,0]}\,|P\rangle\Big|_{\xi\cdot n=0}.$$

Gluons	$-g_T^{ij}$	$i\epsilon_T^{ij}$	k_T^i, k_T^{ij}, etc.
U	$\boldsymbol{f_1^g}$		$h_1^{\perp,g}$
L		$\boldsymbol{g_1^g}$	$h_{1L}^{\perp,g}$
T	$f_{1T}^{\perp,g}$	g_{1T}^g	h_1^g, $h_{1T}^{\perp,g}$

Mulders, Rodrigues, PRD63(01),

Meissner, Metz, Goeke, PRD76(07), renaming

Unpolarized gluon distribution functions at small x

Using the McLerran-Venugopalan (MV) model , unpolarized distribution function is

$$x f^g_{1,WW}(x,k_\perp) = \frac{N_c^2-1}{N_c}\frac{S_\perp}{4\pi^4\alpha_s}\int d^2\xi_\perp\, e^{-i\vec{k}_\perp\cdot\vec{\xi}_\perp}\frac{1}{\xi_\perp^2}\left(1-e^{-\frac{\xi_\perp^2 Q_s^2}{4}}\right)$$

$$x f^g_{1,DP}(x,k_\perp) = \frac{k_\perp^2 N_c}{2\pi^2\alpha_s}S_\perp\int\frac{d^2\xi_\perp}{(2\pi)^2}\, e^{-i\vec{k}_\perp\cdot\vec{\xi}_\perp}e^{-\frac{\xi_\perp^2 Q_s^2}{4}}$$

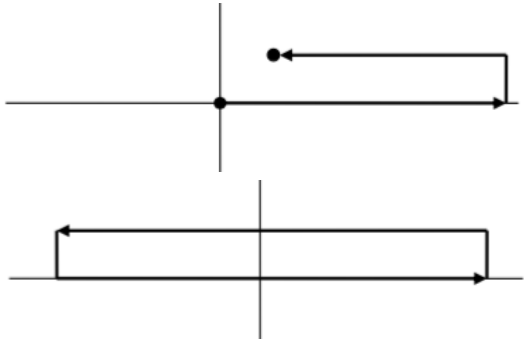

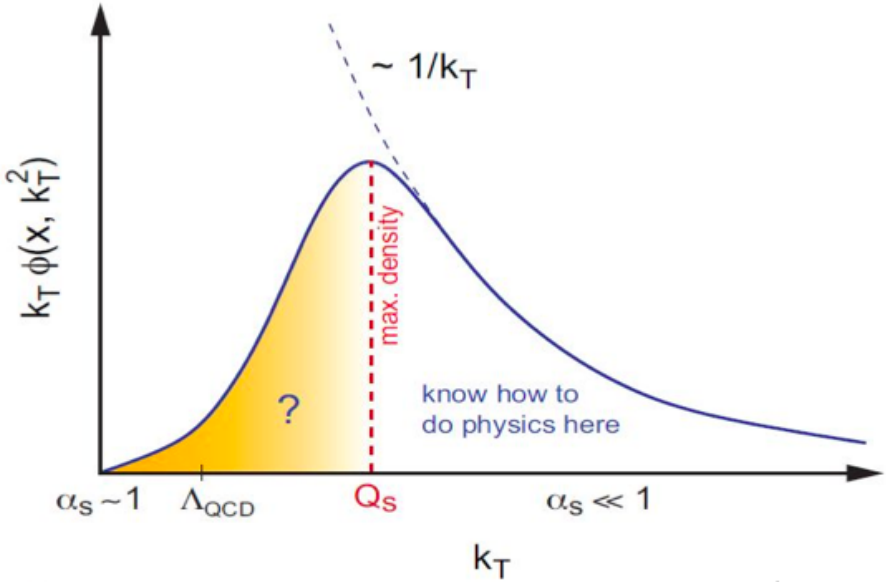

Kovchegov, PRD54(96)

Marian, Kovner, Mclerran, Weigert, RPD55 (97)

Linearly polarized gluon distribution functions at small x

Also in the MV model

$$x\, h^{\perp g}_{1,WW}(x,k_\perp) = \frac{N_c^2-1}{4\pi^3} S_\perp \int d^2\xi_\perp \frac{J_2(k_\perp \xi_\perp)}{\frac{1}{4\mu_A}\xi_\perp Q_s^2}\left(1-e^{-\frac{\xi_\perp^2 Q_s^2}{4}}\right)$$

$$x\, h^{\perp g}_{1,DP}(x,k_\perp) = 2x\, f^g_{1,DP}(x,k_\perp) = \frac{k_\perp^2 N_c}{\pi^2\alpha_s} S_\perp \int \frac{d^2\xi_\perp}{(2\pi)^2}\, e^{-i\vec{k}_\perp\cdot\vec{\xi}_\perp} e^{-\frac{\xi_\perp^2 Q_s^2}{4}}$$

A. Metz, J. Zhou, PRD84(11)

- ♠ At large $k_\perp, k_\perp \gg Q_s$

$$x\, f^g_{1,WW}(x,k_\perp),\ x\, h^{\perp g}_{1,WW}(x,k_\perp),\ x\, f^g_{1,DP}(x,k_\perp) = x\, h^{\perp g}_{1,DP}(x,k_\perp) \propto \frac{1}{k_\perp^2}$$

- ♠ At small $k_\perp, \Lambda_{QCD} \ll k_\perp \ll Q_s$

$$x\, f^g_{1,WW}(x,k_\perp) \propto ln\frac{Q_s^2}{k_\perp^2},\ x\, h^{\perp g}_{1,WW}(x,k_\perp) \propto \frac{1}{Q_s^2}$$

$$x\, f^g_{1,DP}(x,k_\perp) = x\, h^{\perp g}_{1,DP}(x,k_\perp) \propto k_\perp^2 e^{-k_\perp^2/Q_s^2}$$

Dominguez, Qiu, Xiao, Yuan PRD85 (12)

TMD evolution

When $k_T << Q$, standard perturbative QCD calculations generate large logarithms $\alpha_s^n \ln^{2n} \frac{Q^2}{k_T^2} + \ldots$, which can be attributed to the energy dependence of the TMDs.
The energy evolution of TMD is given by the Collins-Soper (CS) equation

$$\frac{\partial \ln \tilde{F}(x, \mathbf{b}_T; \mu, \zeta_F)}{\partial \ln \sqrt{\zeta_F}} = \tilde{K}(\mathbf{b}_T; \mu), \quad \text{with} \quad \tilde{K}(\mathbf{b}_T; \mu) = \frac{1}{2} \frac{\partial}{\partial y_s} \ln \left(\frac{\tilde{S}(\mathbf{b}_T; y_s, -\infty)}{\tilde{S}(\mathbf{b}_T; +\infty, y_s)} \right).$$

and Renormalization Group equations,

$$\frac{d\tilde{K}(\mathbf{b}_T; \mu)}{d \ln \mu} = -\gamma_K(g(\mu)), \qquad \frac{d \ln \tilde{F}(x, \mathbf{b}_T; \mu, \zeta_F)}{d \ln \mu} = \gamma_F(g(\mu); \zeta_F/\mu^2).$$

By solving these equations, the large logarithms can be resumed, result in the Sudakov factor in exponential.

Collins, Foundations of perturbative QCD, (11); Aybat, Rogers, PRD83 (11)

Azimuthal asymmetry in $pA \to \gamma^* \, jet \, X$

$$p + A \to q(p) + g(n) + X \to \gamma^*(k_1) + q(k_2) + X$$

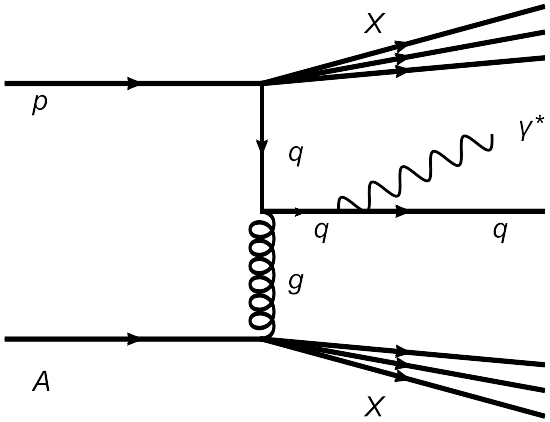

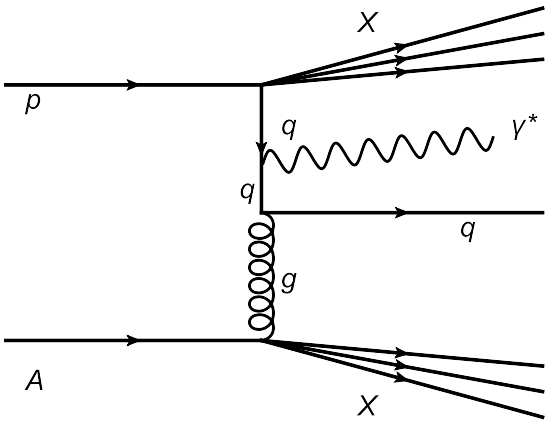

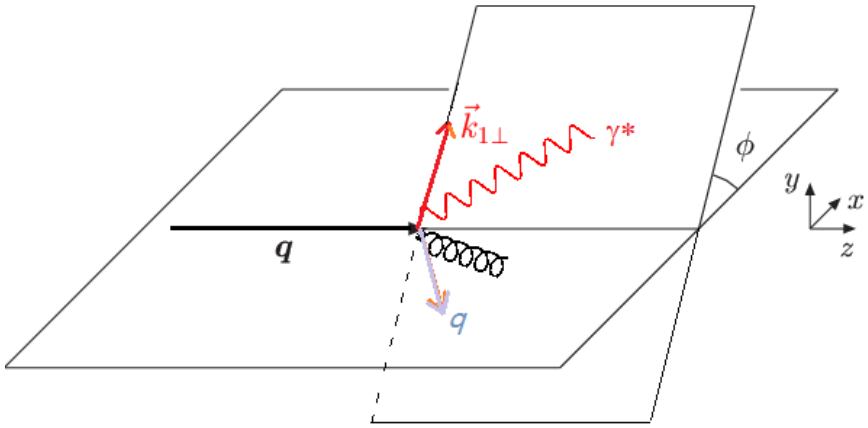

$$p = (p^+, 0, 0_\perp), \; n = (0, n^-, \vec{k}_\perp),$$

$$\vec{P}_\perp = \frac{\vec{k}_{1\perp} - \vec{k}_{2\perp}}{2} \simeq \vec{k}_{1\perp} \simeq -\vec{k}_{2\perp},$$

$$\vec{k}_\perp = \vec{k}_{1\perp} + \vec{k}_{2\perp}$$

$$\phi = \vec{P}_\perp \wedge \vec{k}_\perp$$

Observable: azimuthal asymmetry

Using hybrid approach[Dominguez, Marquet, Xiao, Yuan, PRD83(11), Mueller, Xiao, Yuan, PRD88(13)], the differential cross section is [A. Metz, J. Zhou, PRD84(11)] ,

$$\frac{\sigma^{pA\to\gamma^* \; q \; X}}{dP.S} = \sum_q x_p \, f_1^q(x_p)\Big\{x \, f_{1,DP}^g(x,k_\perp) \; H_{Born} + \cos(2\phi) \; x \; h_{1,DP}^{\perp g}(x,k_\perp) H_{Born}^{\cos(2\phi)}\Big\}$$

$$= \sum_q x_p \, f_1^q(x_p) \; x \, f_{1,DP}^g(x,k_\perp)\Big\{ \; 1 + \cos(2\phi)\frac{2Q^2\hat{t}}{\hat{s}^2 + \hat{u}^2 + 2Q^2\hat{t}}\Big\}$$

- Azimuthal asymmetry disappears as Q^2 goes to zero.
- An important (only clean) process to measure $h_{1,DP}^{\perp g}$.

$$< \cos(2\phi) >= \frac{\int \frac{d\sigma}{dP.S} d\phi \; \cos(2\phi)}{\int \frac{d\sigma}{dP.S} d\phi} = \frac{H_{Born}^{\cos(2\phi)}}{H_{Born}}, \qquad \text{[no evolution]}$$

$pA \to \gamma^* \; jet \; X$, resummation

differential cross section in k space

$$\frac{\sigma^{pA\to\gamma^* \; q \; X}}{dP.S} = \sum_q x_p \, f_1^q(x_p) \times \left\{ x \, f_{1,DP}^g(x, k_\perp) \, H_{Born} + x \, h_{1,DP}^{\perp g}(x, k_\perp) \left[2(\hat{k}_\perp \cdot \hat{P}_\perp)^2 - 1 \right] H_{Born}^{\cos(2\phi)} \right\}$$

in b space

$$\frac{\sigma^{pA\to\gamma^* \; q \; X}}{dP.S} = \sum_q \int d^2 b_\perp \; e^{i\vec{k}_\perp \cdot \vec{b}_\perp} \; x_p \, f_1^q(x_p) \times \left\{ x \, f_{1,DP}^g(x, b_\perp) \, H_{Born} + x \, h_{1,DP}^{\perp g}(x, b_\perp) \left[2(\hat{b}_\perp \cdot \hat{P}_\perp)^2 - 1 \right] H_{Born}^{\cos(2\phi)} \right\}$$

$pA \to \gamma^* \; jet \; X$, resummation

differential cross section in k space

$$\frac{\sigma^{pA\to\gamma^* \; q \; X}}{dP.S} = \sum_q x_p \, f_1^q(x_p) \times \left\{ x \, f_{1,DP}^g(x, k_\perp) \, H_{Born} + x \, h_{1,DP}^{\perp g}(x, k_\perp) \left[2(\hat{k}_\perp \cdot \hat{P}_\perp)^2 - 1 \right] H_{Born}^{\cos(2\phi)} \right\}$$

in b space

$$\frac{\sigma^{pA\to\gamma^* \; q \; X}}{dP.S} = \sum_q \int d^2 b_\perp \; e^{i\vec{k}_\perp \cdot \vec{b}_\perp} \; x_p \, f_1^q(x_p) \times \left\{ x \, f_{1,DP}^g(x, b_\perp) \, H_{Born} + x \, h_{1,DP}^{\perp g}(x, b_\perp) \left[2(\hat{b}_\perp \cdot \hat{P}_\perp)^2 - 1 \right] H_{Born}^{\cos(2\phi)} \right\}$$

Gluon TMDs in b space

$$x\, f^g_{1,DP}(x, b_\perp) = \int \frac{d^2k_\perp}{(2\pi)^2}\, e^{i\vec{k}_\perp\cdot\vec{b}_\perp} x\, f^g_{1,DP}(x, k_\perp)$$

$$\left[2(\hat{b}_\perp \cdot \hat{P}_\perp)^2 - 1\right] x\, h^{\perp g}_{1,DP}(x, b_\perp) = \int \frac{d^2k_\perp}{(2\pi)^2}\, e^{i\vec{k}_\perp\cdot\vec{b}_\perp}\, x\, f^g_{1,DP}(x, k_\perp)\left[2(\hat{k}_\perp \cdot \hat{P}_\perp)^2 - 1\right]$$

$$\Rightarrow \quad x\, h^{\perp g}_{1,DP}(x, b_\perp) = -\int \frac{dk_\perp}{2\pi} J_2(b_\perp k_\perp)\, x\, f^g_{1,DP}(x, k_\perp)$$

rewrite unpolarized gluon TMD in k space

$$x\, f^g_{1,DP}(x, k_\perp) = \frac{k_\perp^2 A\, x\, G_p(x)}{Q_s^2} \int \frac{d^2b_\perp}{(2\pi)^2}\, e^{-i\vec{k}_\perp\cdot\vec{b}_\perp} e^{-\frac{Q_s^2 b_\perp^2}{4}}$$

in b space

$$\begin{aligned} x\, f^g_{1,DP}(x, b_\perp) &= AxG_p(x)\frac{1}{2\pi^2}\left[1 - \frac{Q_s^2 b_\perp^2}{4}\right] e^{-\frac{Q_s^2 b_\perp^2}{4}} \\ x\, h^{\perp g}_{1,DP}(x, b_\perp) &= -AxG_p(x)\frac{1}{2\pi^2}\left[\frac{Q_s^2 b_\perp^2}{4}\right] e^{-\frac{Q_s^2 b_\perp^2}{4}} \end{aligned}$$

$pA \to \gamma^* \; jet \; X$, resummation

$$\frac{\sigma^{pA\to\gamma^* \; q \; X}}{dP.S} = \sum_q \int d^2 b_\perp e^{i\vec{k}_\perp \cdot \vec{b}_\perp} x_p \, f_1^q(x_p, \mu_b) e^{-S(\mu_b, P_\perp)} \Big\{ x \, f_{1,DP}^g(x, b_\perp, \mu_b^2, \mu_b) H_{Born}$$

$$+ x \, h_{1,DP}^{\perp g}(x, b_\perp, \mu_b^2, \mu_b) \left[2(\hat{b}_\perp \cdot \hat{P}_\perp)^2 - 1 \right] H_{Born}^{\cos(2\phi)} \Big\}$$

$$S(\mu_b, P_\perp) = \int_{\mu_b}^{P_\perp} \frac{d\mu}{\mu} \alpha_s(\mu) \left(\frac{C_F + C_A}{\pi} ln \frac{P_\perp^2}{\mu^2} - \frac{C_F}{\pi} \frac{3}{2} - \frac{C_A}{\pi} \frac{11 - 2n_f/C_A}{6} \right)$$

where $\mu_b = 2e^{-\gamma_E}/b_\perp \equiv b_0/b_\perp$.

Mueller, Xiao, Yuan, PRD88(13)

- At large $b_\perp$ (small $k_\perp$), b_* method

$$b_\perp \Rightarrow b_{\perp *} = \frac{b_\perp}{\sqrt{1 + b_\perp^2 / b_{max}^2}}, \qquad \mu_b \Rightarrow \mu_{b_*} \tag{1}$$

$$S_{NP} = \left(g_1 + g_2 \ln \frac{Q}{Q_0} + 2 g_1 g_3 \ln \frac{10 x x_0}{x_0 + x} \right) b_\perp^2$$

$$b_{max} = 1.5\text{GeV}^{-1}, \; g_1 = 0.201\text{GeV}^2, \; g_2 = 0.184\text{GeV}^2,$$
$$g_3 = -0.129, \; x_0 = 0.009, \; Q_0 = 1.6\text{GeV}$$

Collins, Foundations of perturbative QCD, (11); Aybat, Rogers, PRD83 (11)

- At small $b_\perp$ (large $k_\perp$), μ_b' method:

$$\mu_b \Rightarrow \mu_b' \equiv \frac{1}{\sqrt{b_\perp^2 / b_0^2 + 1/Q^2}} \tag{2}$$

D Boer,QCD Evolution 2015 proceeding; T Rogers' talk yesterday

(1)+(2) $\Rightarrow \mu'_{b*}$

Numerical Results

RHIC : $\sqrt{s} = 200$ GeV, $Q_s^2(x) = 1GeV^2 A^{1/3} (\frac{x_0}{x})^{0.3}$ with $x_0 = 3 \times 10^{-4}$

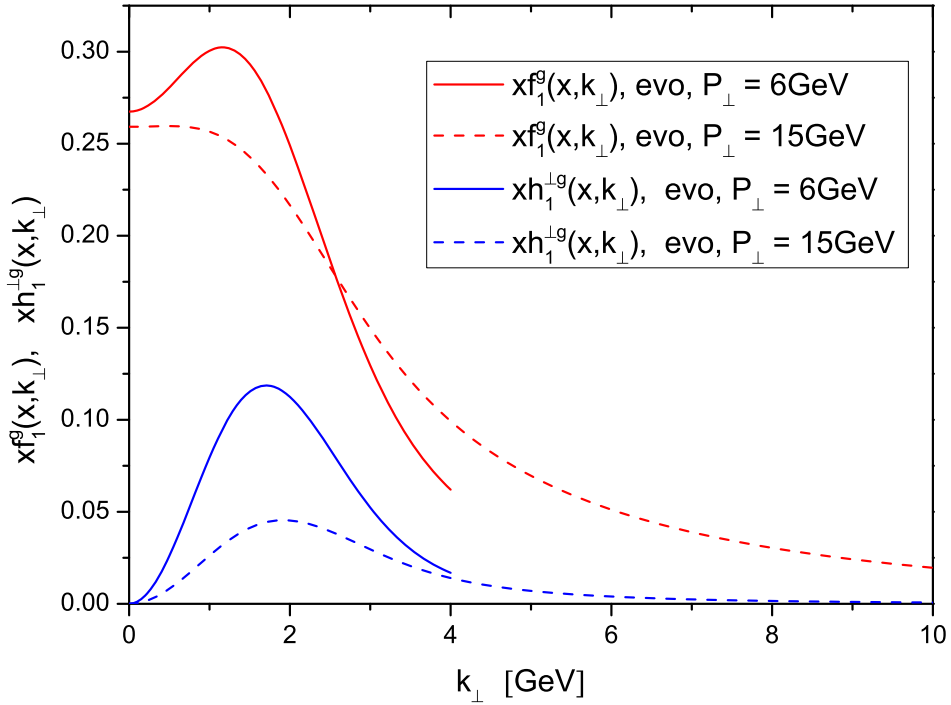

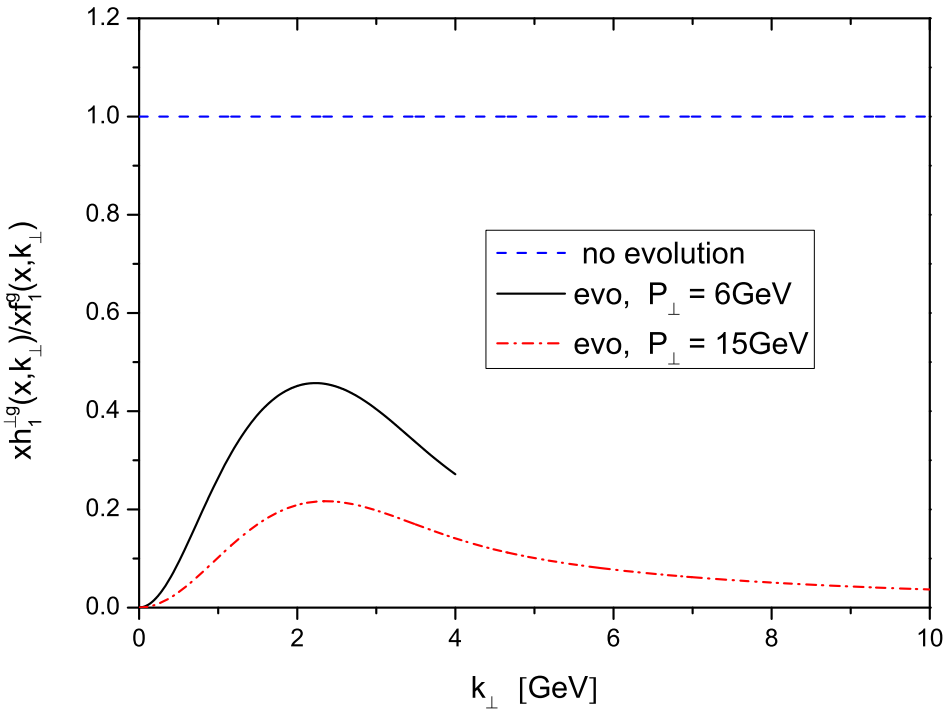

$$x\, f^g_{1,DP}(x, k_\perp) = x\, h^{\perp g}_{1,DP}(x, k_\perp)$$

evolve from $P_\perp = Q_s \simeq 1.4$GeV to $P_\perp = 6$GeV, 15GeV

Numerical Results

RHIC : $\sqrt{s} = 200$ GeV, $Q_s^2(x) = 1GeV^2 A^{1/3} (\frac{x_0}{x})^{0.3}$ with $x_0 = 3 \times 10^{-4}$

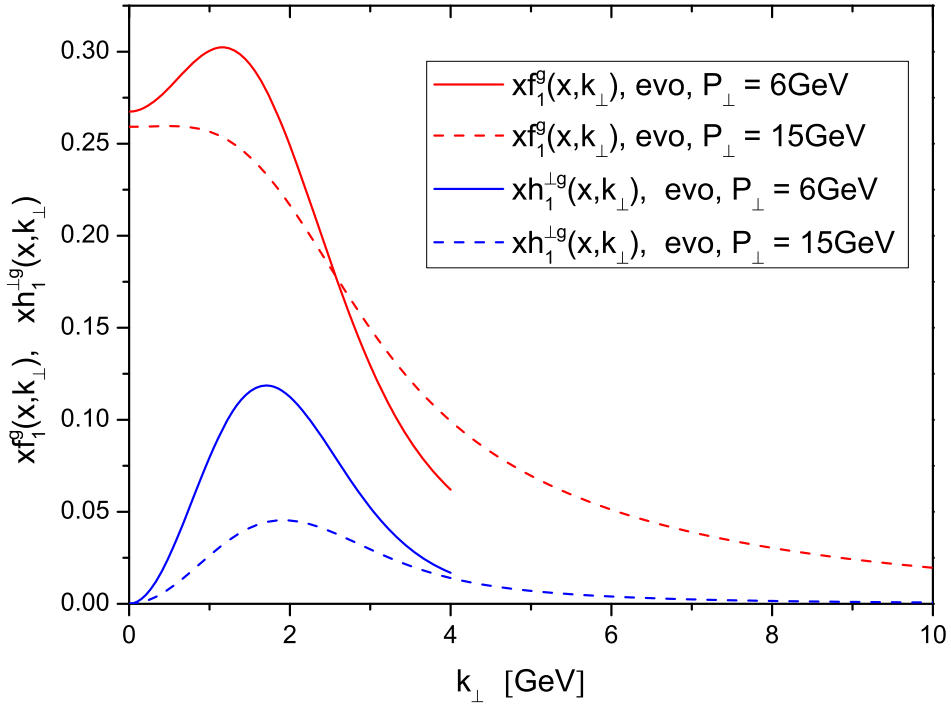

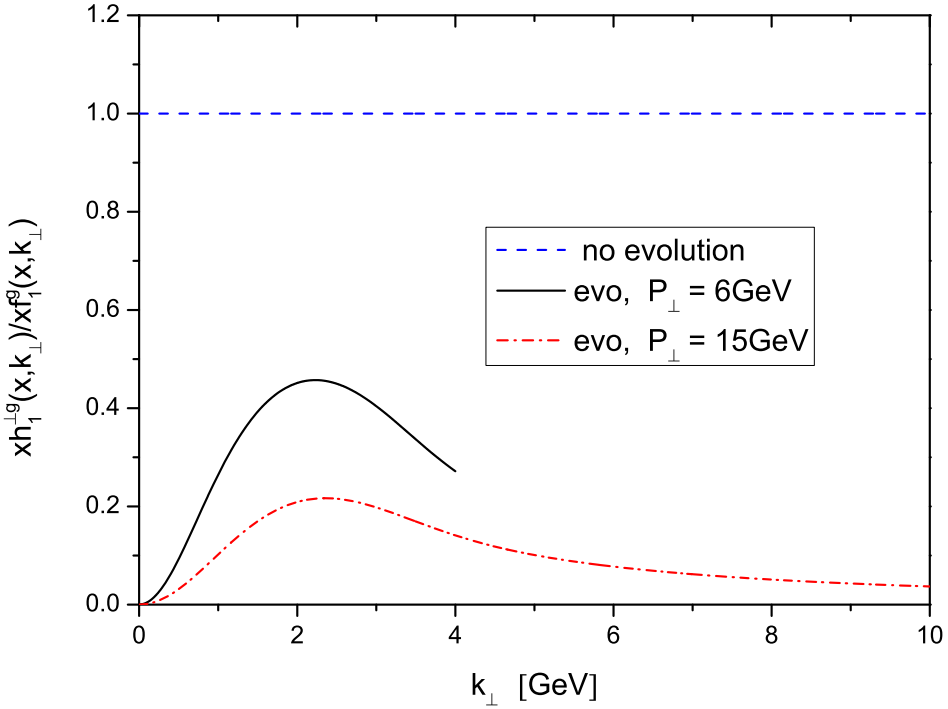

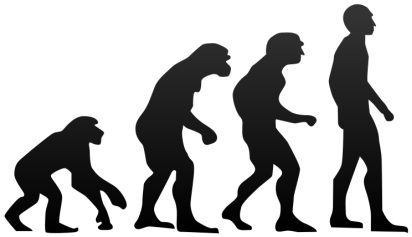

$h_1^{\perp g}$ $h_1^{\perp g}$ $h_1^{\perp g}$

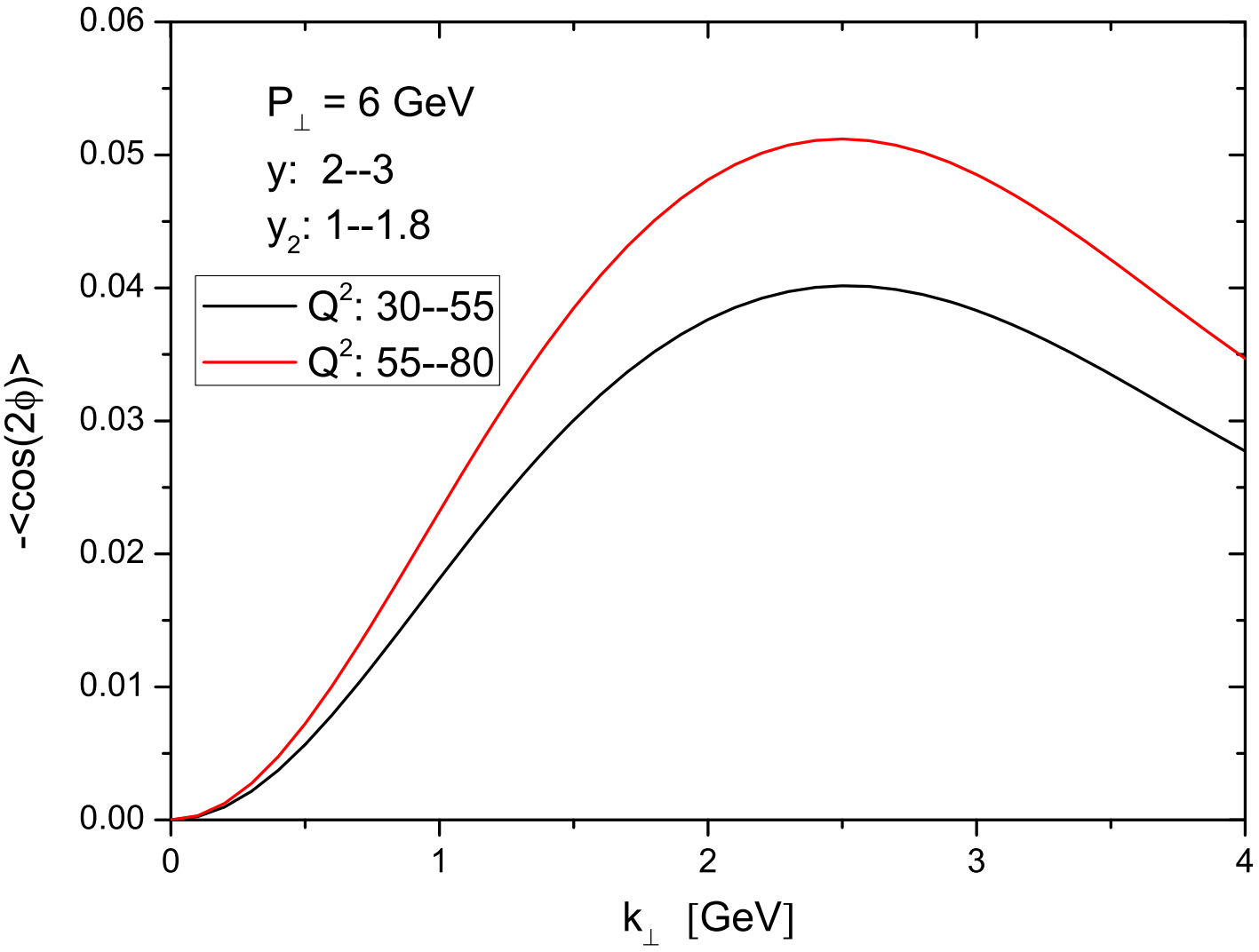

y: rapidity of γ^*

y_2: rapidity of the quark

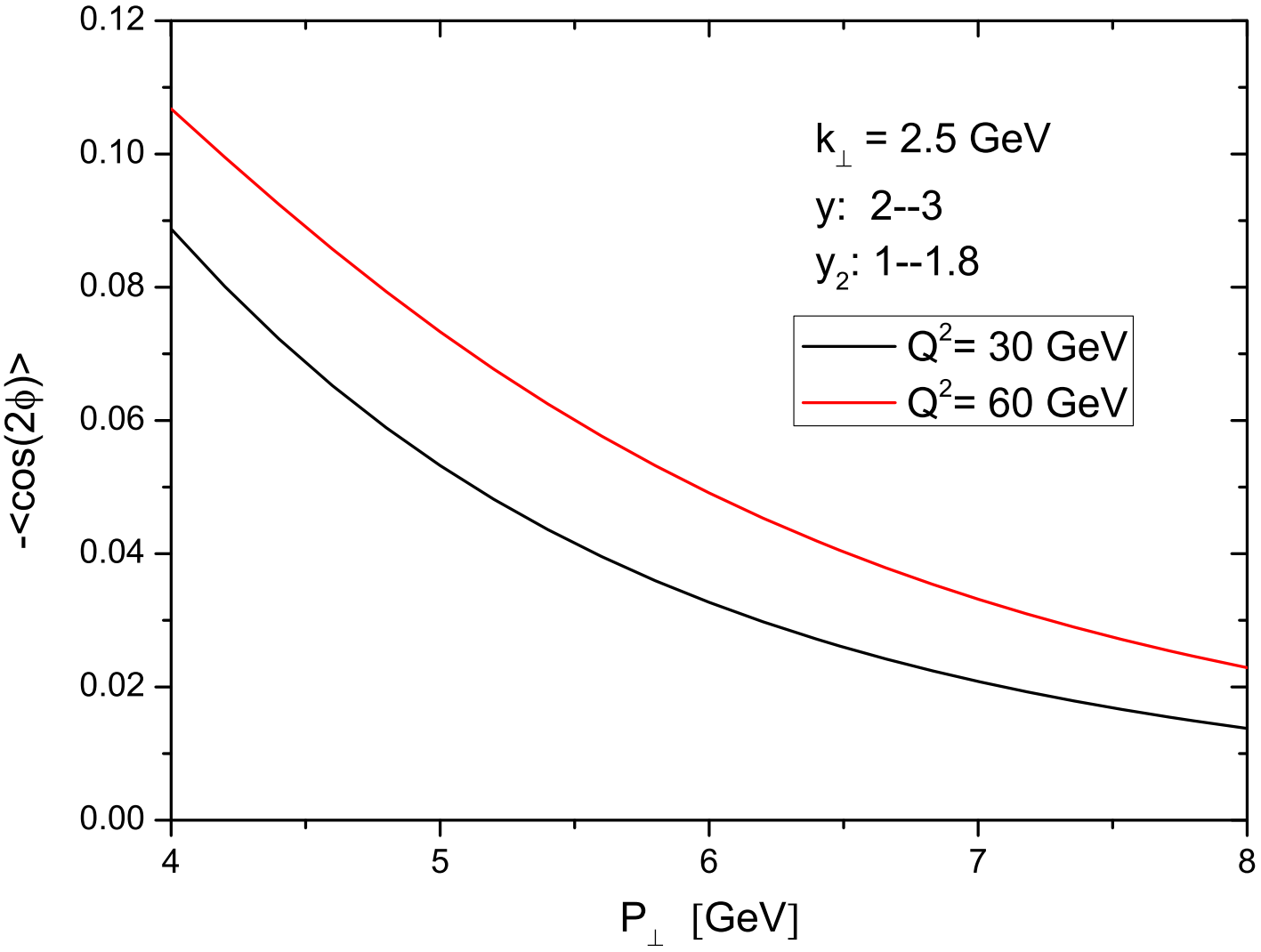
0.12
0.10
0.08
0.06
0.04
0.02
0.00
-<cos(2ϕ)>
4
5
6
7
8
P⊥ [GeV]
k⊥ = 2.5 GeV
y: 2--3
y2: 1--1.8
Q2= 30 GeV
Q2= 60 GeV

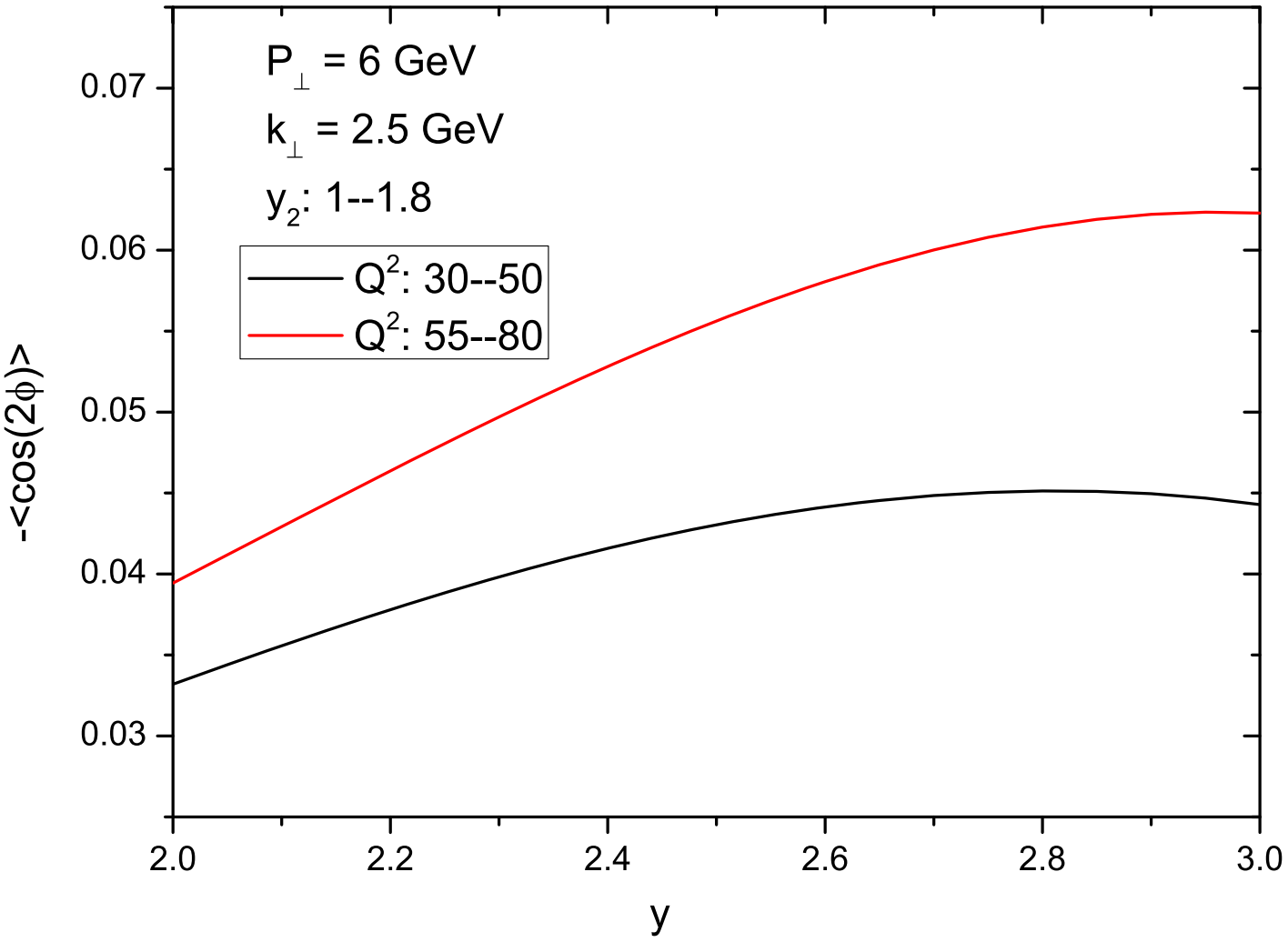
P⊥ = 6 GeV
k⊥ = 2.5 GeV
y2: 1--1.8
Q2: 30--50
Q2: 55--80
-<cos(2ϕ)>
0.07
0.06
0.05
0.04
0.03
2.0
2.2
2.4
2.6
2.8
3.0
y

Summary

- The ratio of the linearly polarized and unpolarized gluon TMDs suppressed a lot after considering energy evolution.

- $pA \to \gamma^* \; jet \; X$ is an important process to study the dipole type linearly polarized gluon distribution, and the azimuthal asymmetry at RHIC for this process could be sizeable, which may provide a promising way to test $h_{1,DP}^{\perp g}$

Thanks!